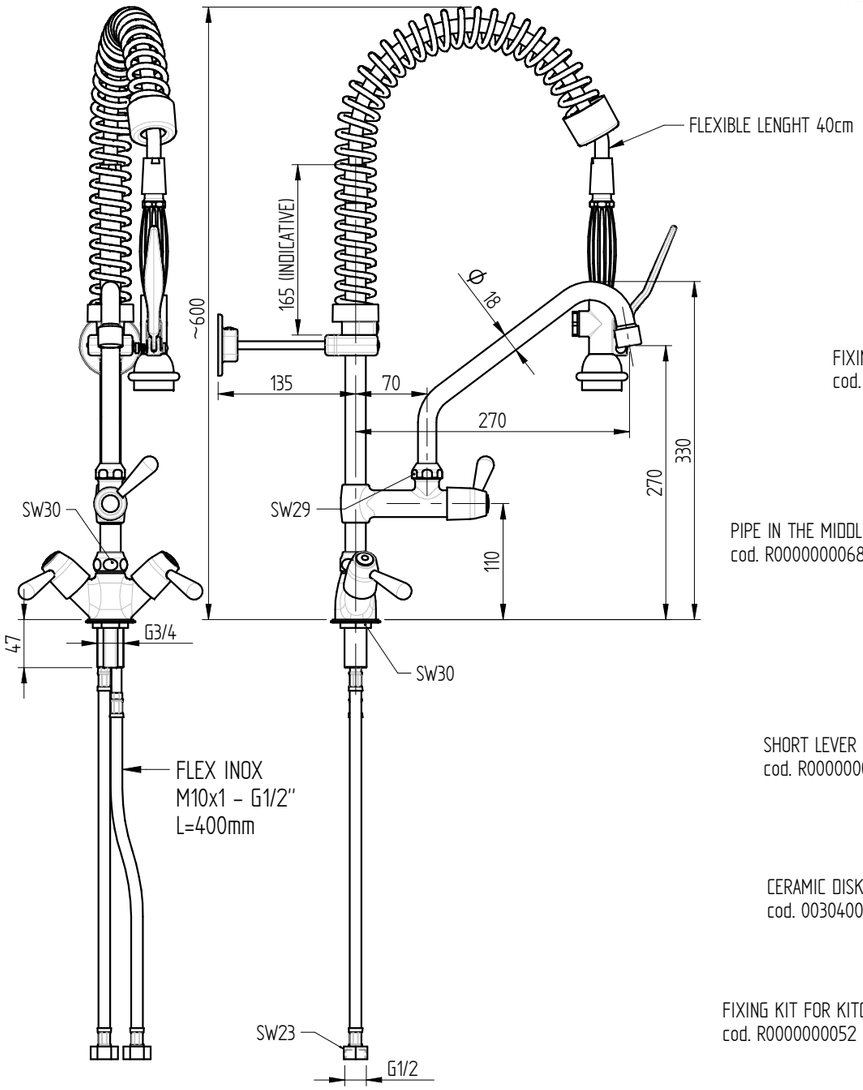

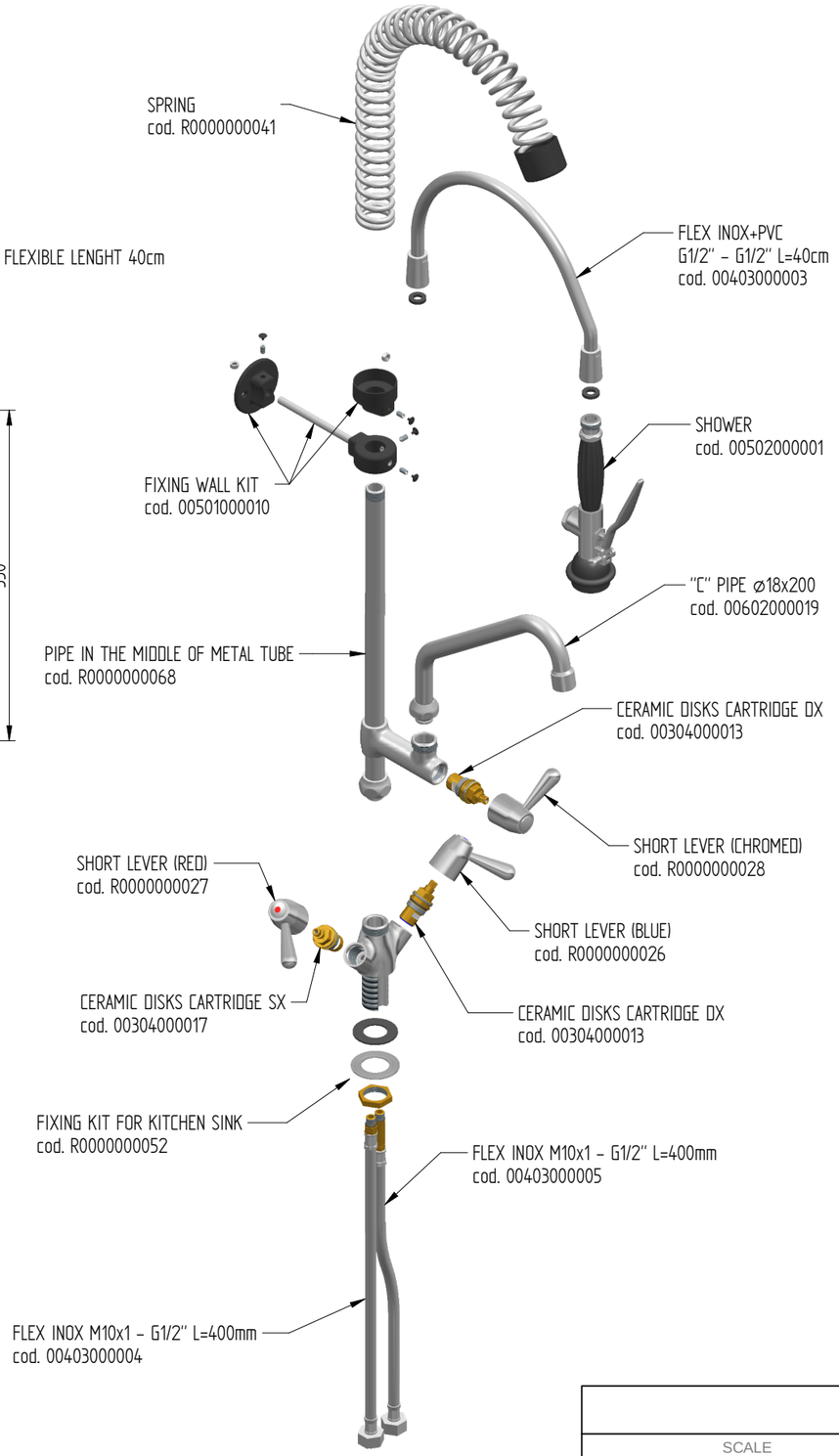

FLOW RATE : 12 L/min at 3,5 BAR only from the shower
14 L/min at 3,5 Bar onlly from the spout
18 L/min at 3,5 BAR when both + spout are open

sink fixing hole : ø27 mm

SCALE A3 1:6	DESCRIPTION ONE HOLE PRE-RINSE UNIT WITH SWINGING "C" SPOUT ø18x200 AND LEVER HANDLE, MINI VERSION, BASIC SHOWER HAND	WEIGHT 3,76 Kg

Rev. 00